FREEDOM RETRACTABLE SCREENS®

Innovative insect screen solutions for modern living

www.freedomscreens.com.au

FREEDOM RETRACTABLE SCREENS® INFINITY ZIPLINE™ SERIES

Freedom Retractable Screens® are the industry leaders of retrofit retractable fly screens, offering the perfect fusion of style and cutting-edge technology for your home and beyond. Established in the sunny Gold Coast in Queensland since 1999, we are an Australian manufacturer at the forefront of both commercial and residential insect screen technology.

With innovative insect screen solutions for french, bi-fold and sliding stacker doors and windows, as well as pillarless corners and large, difficult-to-screen openings, our products are made and defined by style, quality and intelligent innovation.

Innovative insect screen solutions for modern living

www.freedomscreens.com.au

CALL 1300 727 336 to speak to one of our dedicated technical support staff

Infinity Zipline™ Series features:

- Spans up to 4.5 metres in a single screen and 9 metres in a double screen
- Unique mesh-to-track retention system which prevents sagging and stops mesh blowouts. High wind resistance.
- Accredited NATA Laboratory results of up to 590 kg of static pressure
- Recessed track option assists in the integration of door with screen installation
- Exclusive patented brake system
- Available in a variety of finishes including powder-coated and anodised aluminium, coloured end-caps and brake levers
- International distribution network with parts and service back-up
- Can be retrofitted to all makes of doors
- Easily serviced
- Several international patents
- 100% Australian designed and manufactured
- Durable construction
- Freedom Retractable Screens established in 1999
- Motorised options available.

FREEDOM RETRACTABLE SCREENS®

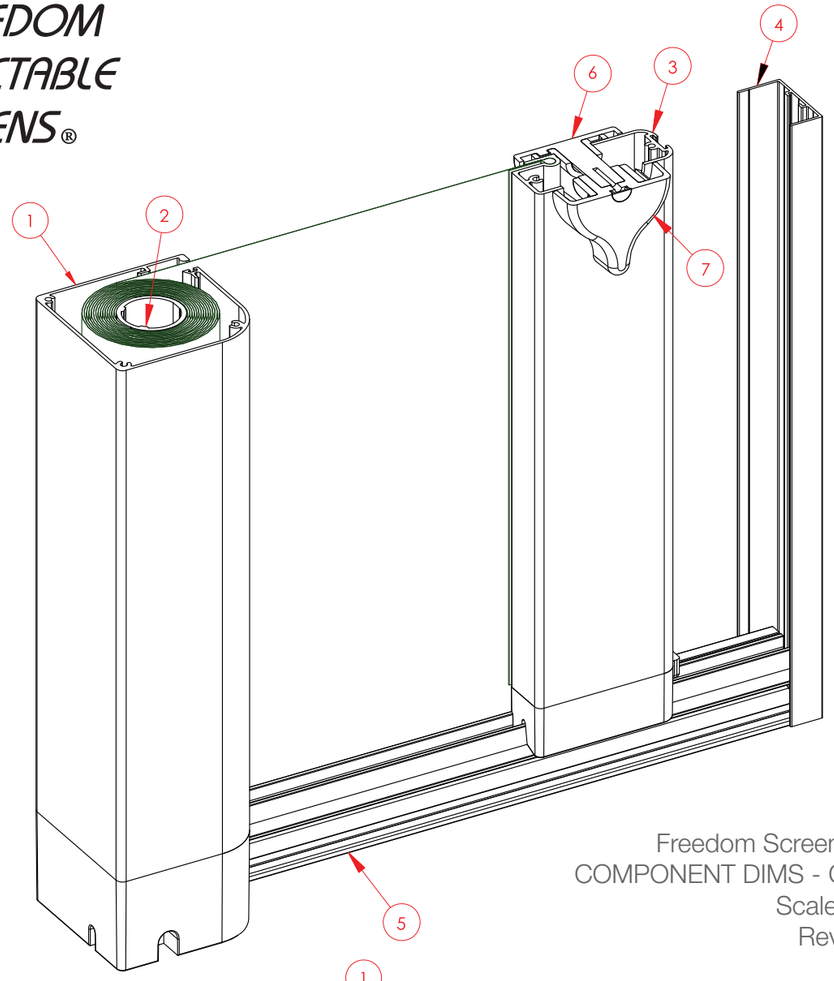

SCALE 2:3

Freedom Screens **Zipline**
COMPONENT DIMS - GENERAL
Scale 1:1 at a3
Revision-006

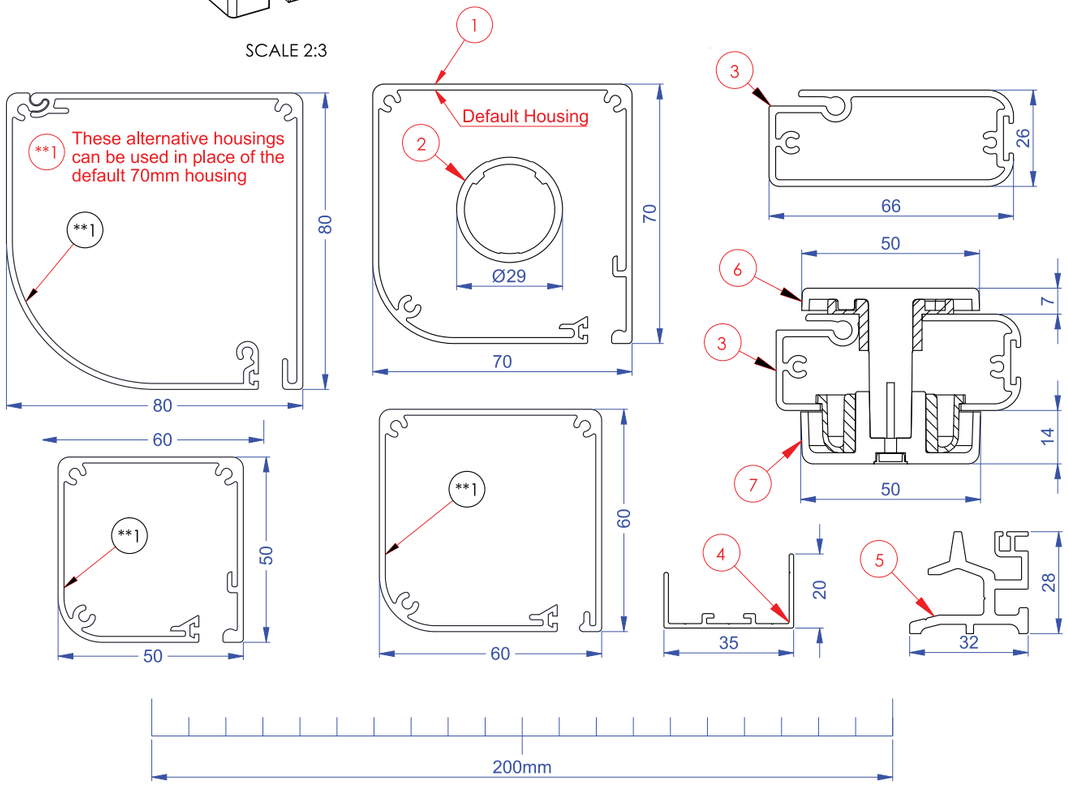

FREEDOM RETRACTABLE SCREENS®

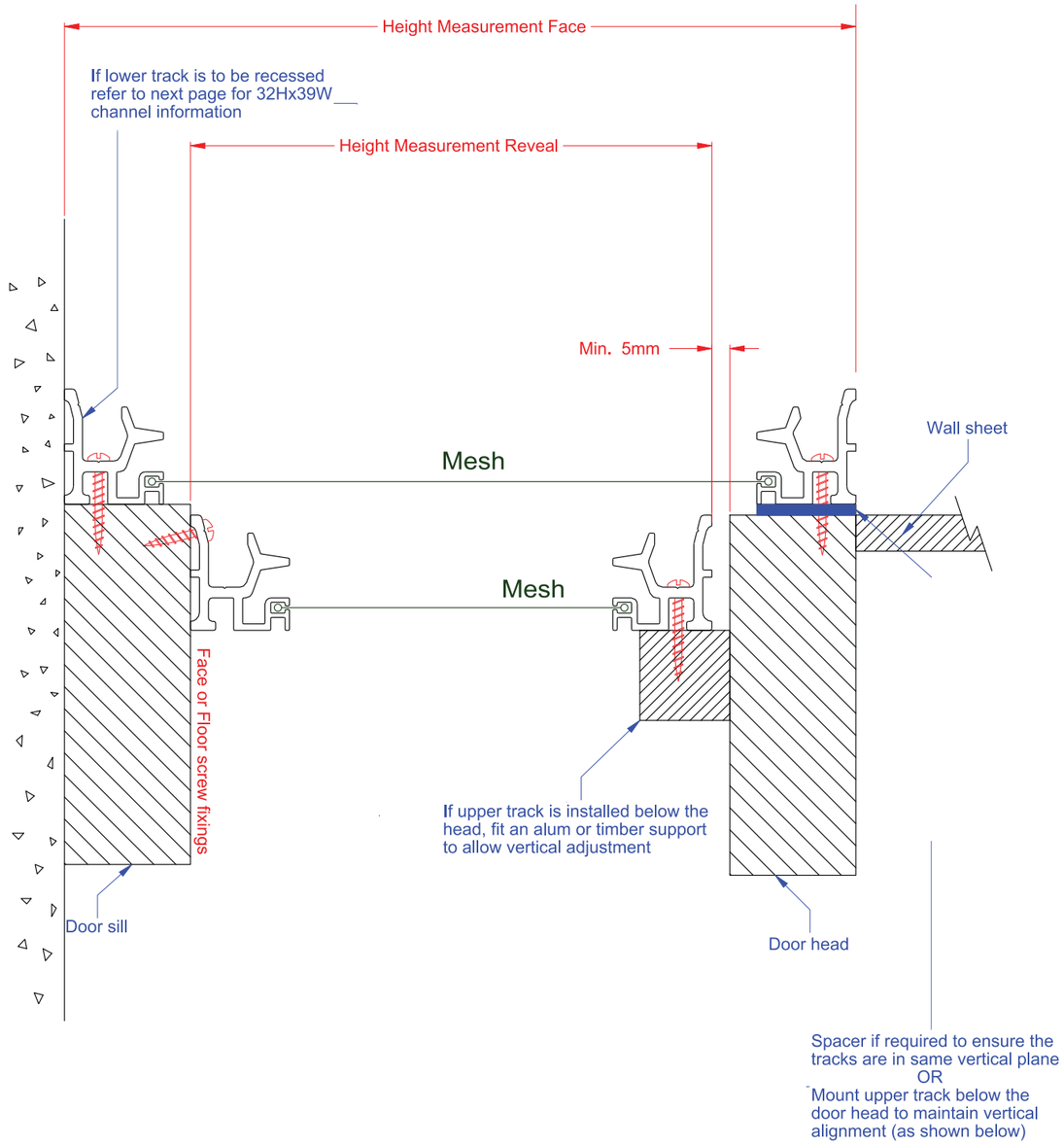

Freedom Screens **Zipline**
END VIEW - FACE or FLOORFIT
Scale 1:1 at a3
Revision-006

Freedom Screens Infinity Zipline™ - SPECIFICATIONS

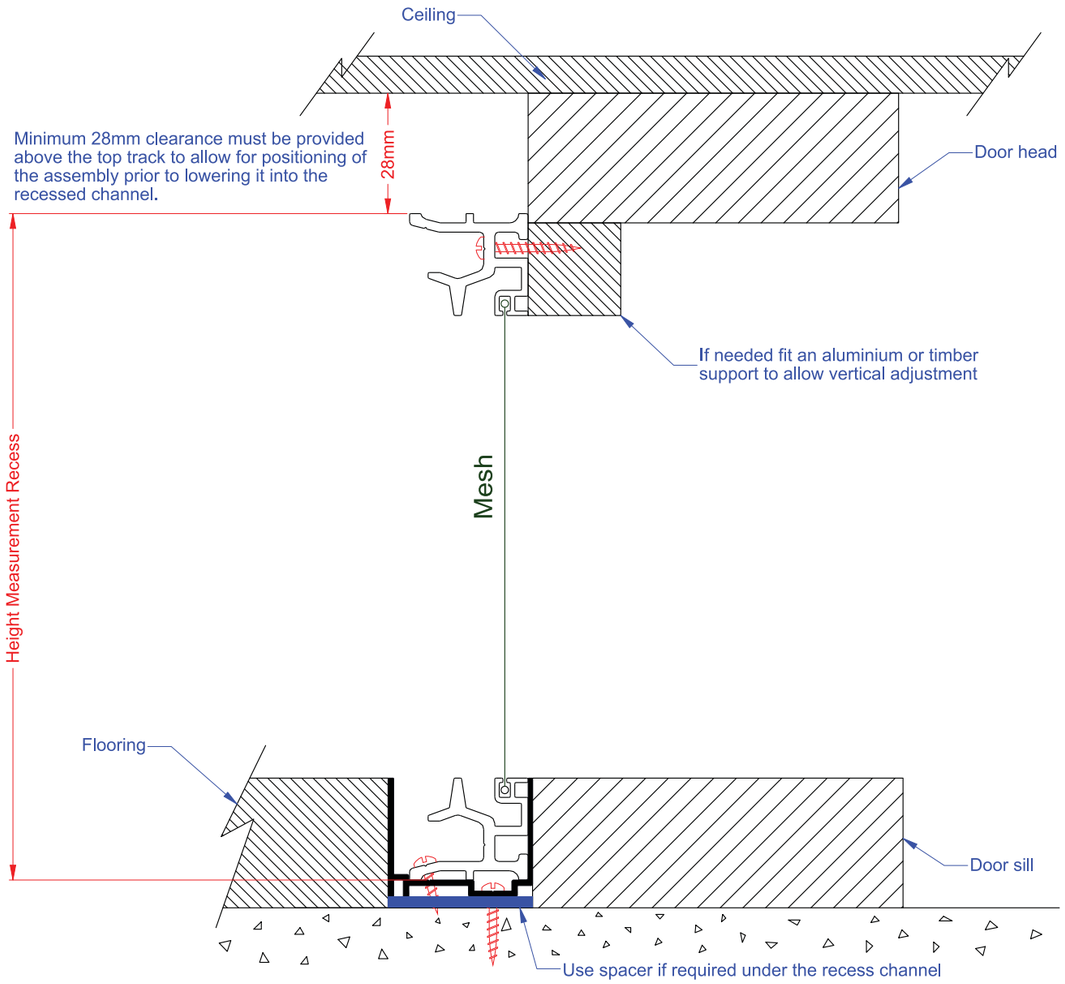

Freedom Screens **Zipline**
END VIEW - RECESS TRACK
Scale 1:1 at a3
Revision-006

Freedom Screens Infinity Zipline™ - SPECIFICATIONS

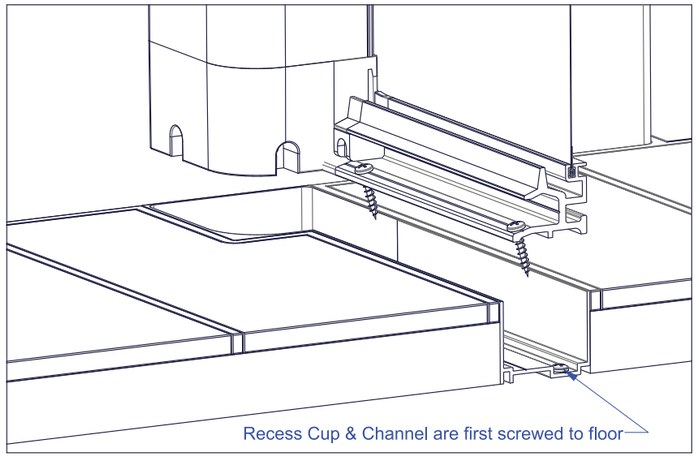

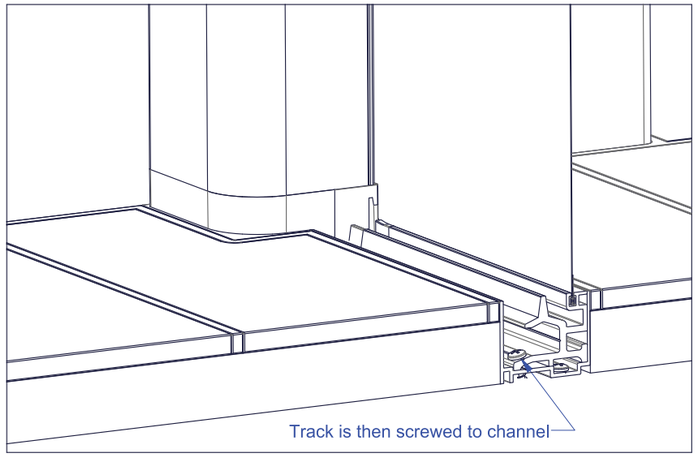

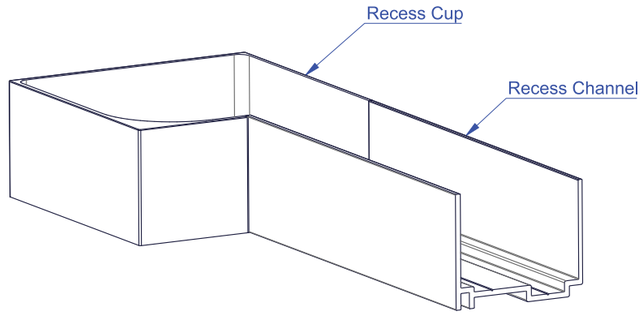

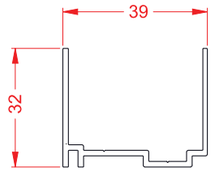

Recess channel & cup assembly may be fitted first to allow flooring to be completed. The screen unit may then be fitted at a later stage near project completion.

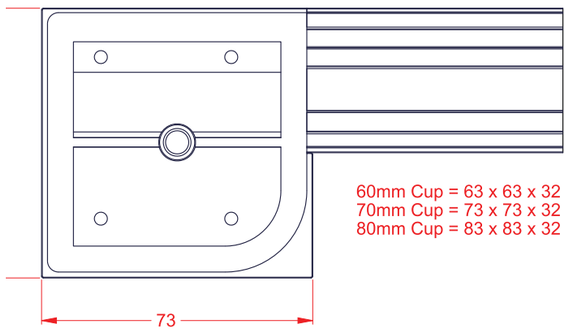

60mm Cup = 63 x 63 x 32
70mm Cup = 73 x 73 x 32
80mm Cup = 83 x 83 x 32

Freedom Screens **Zipline**
DETAIL - RECESS TRACK
Scale 1:1 at a3
Revision-006

Freedom Screens **Zipline**
PLAN VIEW - STACKER DOORS
Scale 1:1 at a3
Revision-006

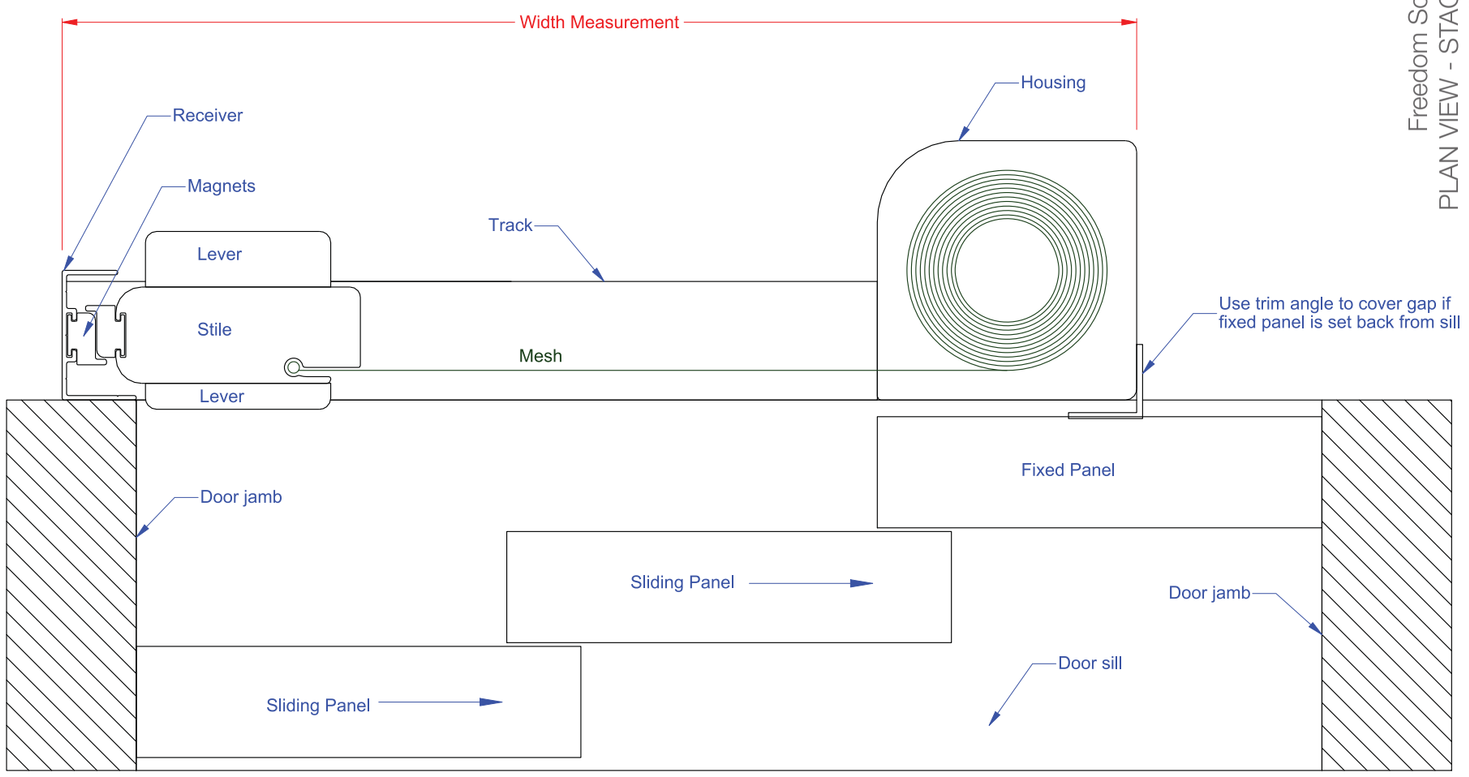

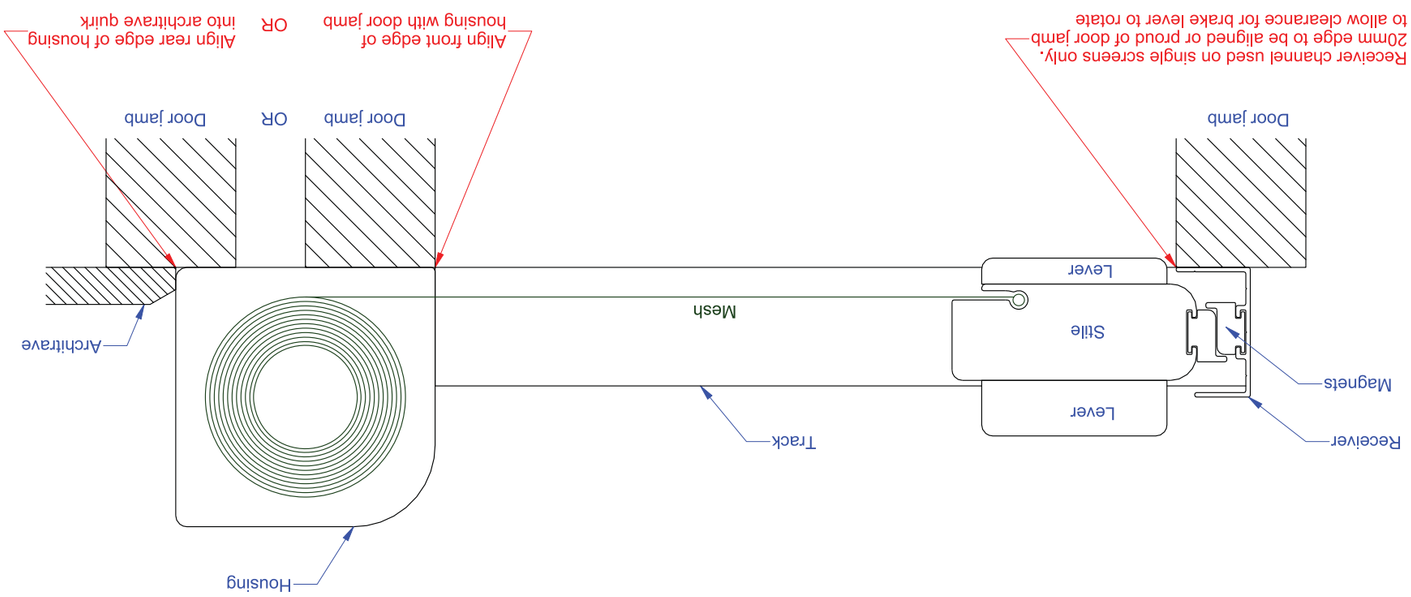

Freedom Screens **Zipline**
PLAN VIEW - GENERAL
Scale 1:1 at a3
Revision-006

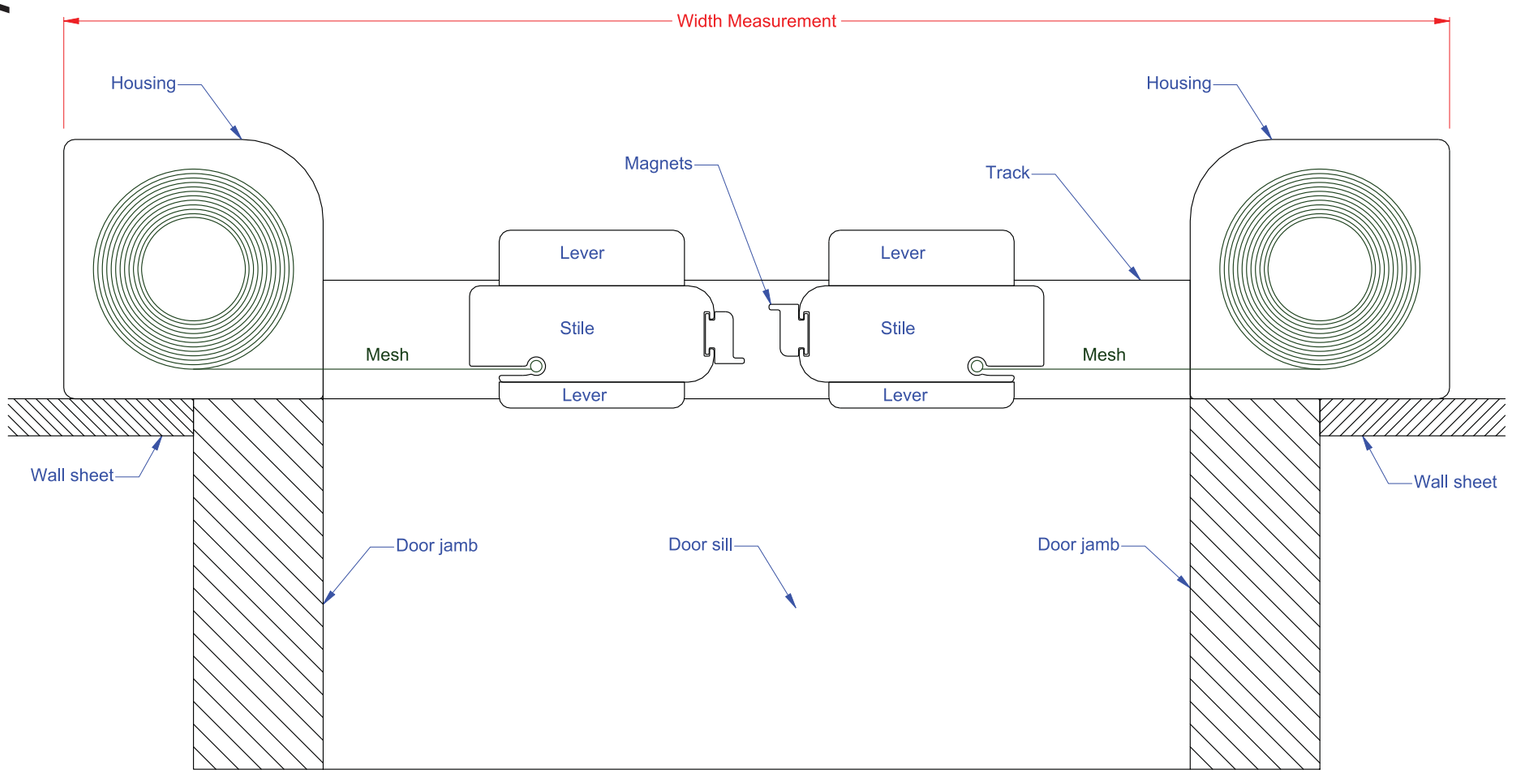

Freedom Screens **Zipline**
PLAN VIEW - DOUBLE DOORS
Scale 1:1 at a3
Revision-006

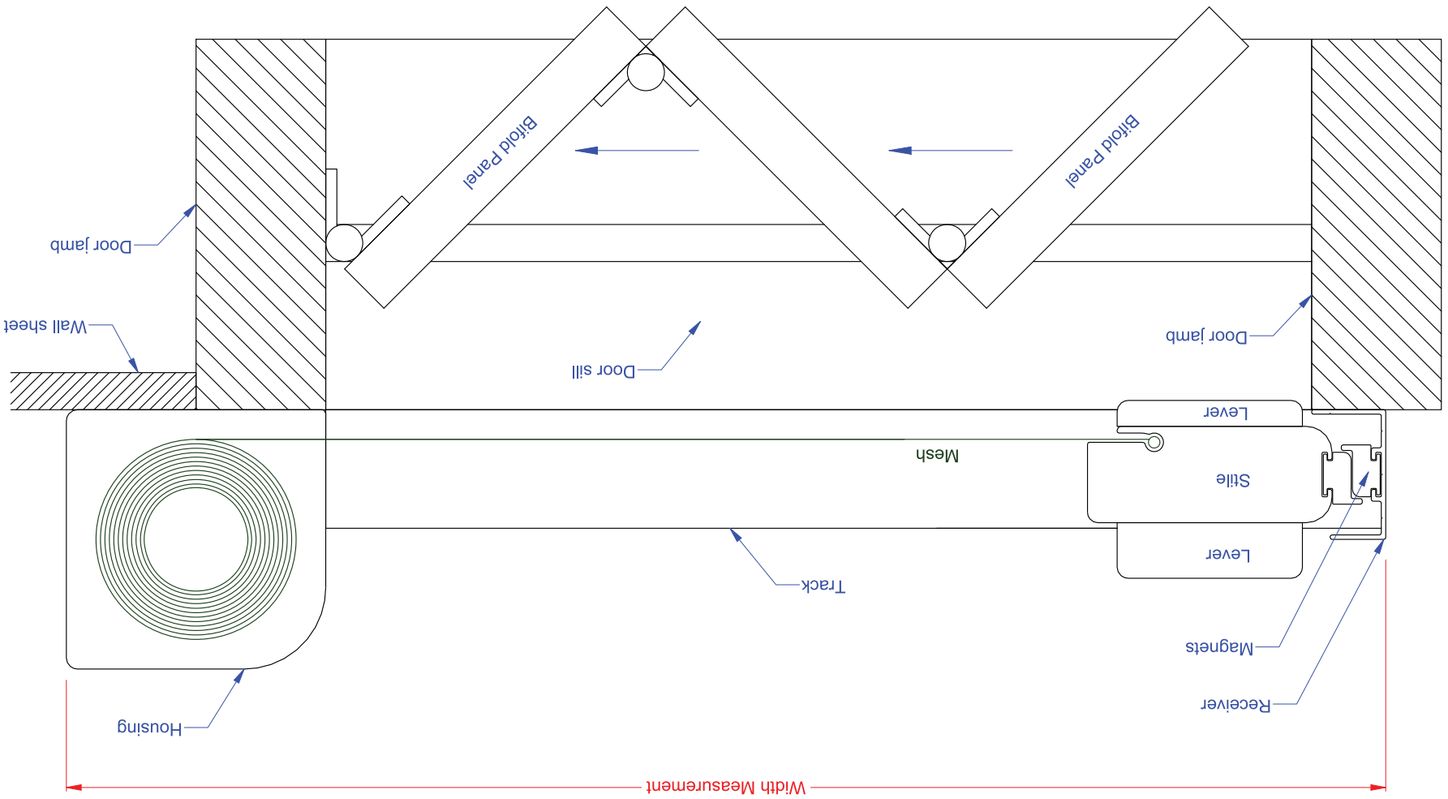

Freedom Screens **Zipline**
PLAN VIEW - BIFOLD DOORS
Scale 1:1 at a3
Revision-006

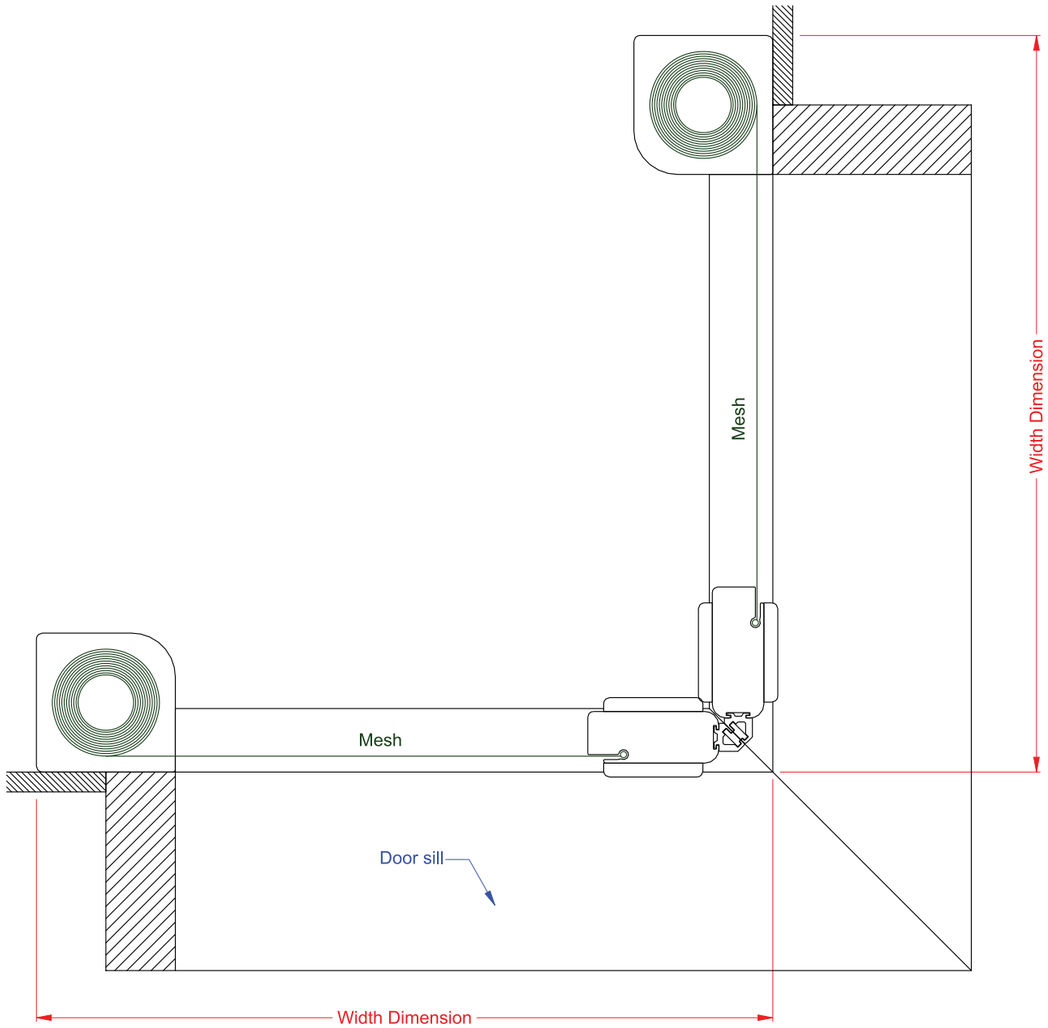

Freedom Screens **Zipline**
PLAN VIEW - INTERNAL CORNER
Scale 1:1 at a3
Revision-006

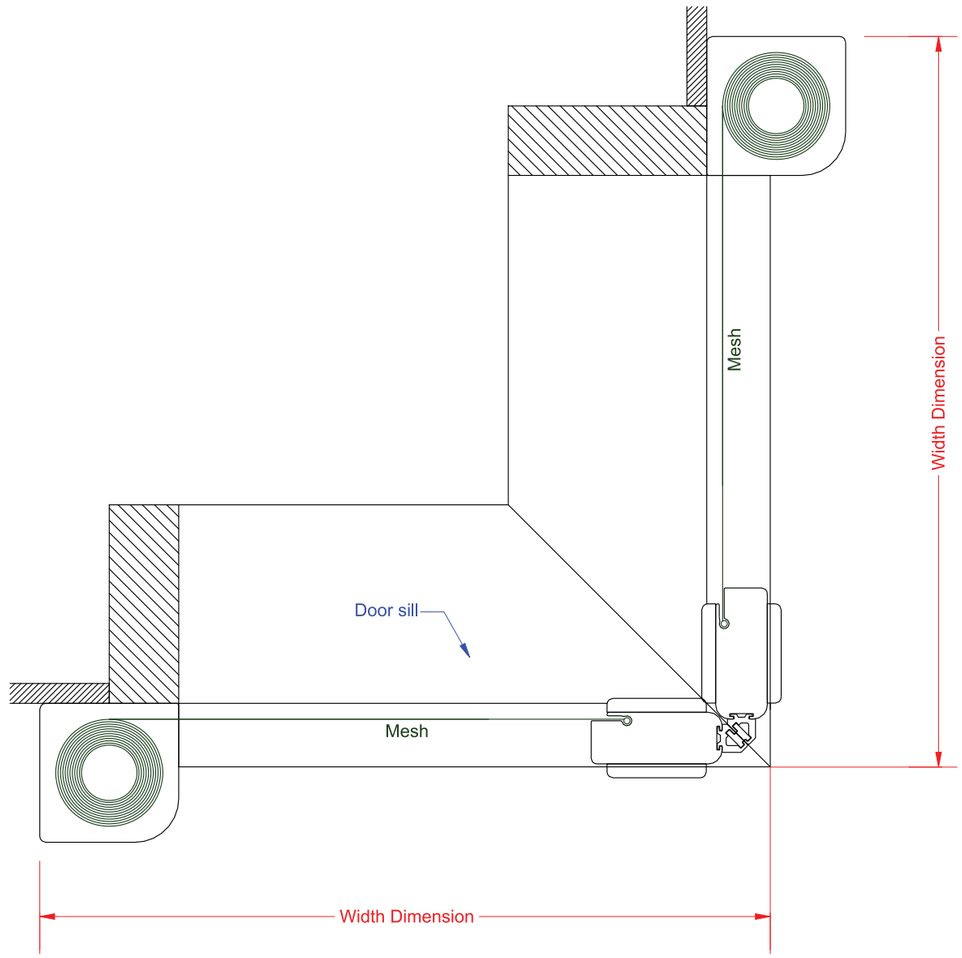

Freedom Screens **Zipline**
PLAN VIEW - EXTERNAL CORNERS
Scale 1:1 at a3
Revision-006

Freedom Screens Infinity Zipline™ - SPECIFICATIONS

INFINITY ZIPLINE™ SERIES

- Patented Technology
- Bug & Insect Protection
- Shade from UV Rays
- Hand Brake System
- High Wind Resistance
- Increased Air Flow
- Air-con Thermal Savings
- Secured Zipper Track

Recessed track channel

Tracks can be recessed to suit flush fit doors, fully integrated with door system.

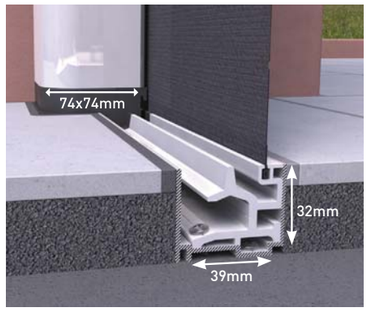

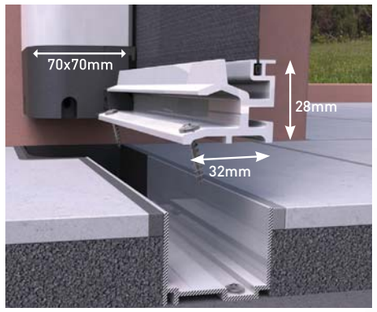

Infinity Zipline™ corner screen

Freedom Retractable Screens® NATA tested wind rating

Mesh locked into track to resist high wind mesh blowouts.

Infinity Zipline™ screen limits

The Infinity Zipline™ screens can span 4.5 metres in a single unit and 9.0 metres in a double unit. The Infinity Zipline™ series is also available in a pull-down style or with a remote control (motorised) for windows, doors and enclosures. All Infinity Zipline™ screens are custom-made to exact requirements, and are available in a range of popular colours and finishes. All screens are supplied and fitted by our professional installers.

Housing	Single screen	Double screen
50mm	**1200mm maximum**	**2400mm maximum**
Patio Mesh	2400mm H up to 1200mm W	2400mm H up to 2400mm W
Pet Mesh	2400mm H up to 1100mm W	2400mm H up to 2200mm W
60mm	**2200mm maximum**	**4400mm maximum**
Patio Mesh	3000mm H up to 2200mm W	3000mm H up to 4400mm W
Pet Mesh	3000mm H up to 1800mm W	3000mm H up to 3600mm W
70mm	**3400mm maximum**	**6800mm maximum**
Patio Mesh	3000mm H up to 2600mm W	3000mm H up to 5200mm W
Patio Mesh	2700mm H up to 3400mm W	2700mm H up to 6800mm W
Pet Mesh	3000mm H up to 2800mm W	3000mm H up to 5600mm W
80mm	**4500mm maximum**	**9000mm maximum**
Patio Mesh	3000mm H up to 2600mm W	3000mm H up to 5200mm W
Patio Mesh	2700mm H up to 4500mm W	2700mm H up to 9000mm W
Pet Mesh	3000mm H up to 4000mm W	3000mm H up to 8000mm W

Colour selection - Special anodised colours available, please select from the Dulux and Interpon range, Visit the download Centre on our website,

www.freedomscreens.com.au

FREEDOM RETRACTABLE SCREENS®

INFINITY ZIPLINE™ SERIES

www.freedomscreens.com.au

smartblind®
thermal efficiency

Experience the difference a Smartblind can make to your living or working environment.

Proudly designed and manufactured in Australia, Smartblind utilises world leading technologically designed fabrics incorporated into an innovative no gap window protection system. Offering up to 99% protection from harmful U.V rays, Smartblind is the best solution for deflecting heat in summer, whilst retaining the warmth during the cooler months. This intelligent blind offers a measurable difference in comfort levels and energy savings, and is proven and tested locally to perform like no other window protection system in the Australian market place.

Smartblind BLOCKOUT

Smartblind SOLTIS 99
3% openness

Smartblind TRANSLUCENT

From 100% complete blockout to fully transparent UV protection, Smartblind has the solution.

www.smartblind.com.au
division of freedom screens of Australia

smartblind®
thermal efficiency

Ideal applications for Smartblind.

- Media/conference rooms.
- Residential homes and apartments.
- Hotels.
- Medical centres / hospitals.
- Government buildings
- Retail/printed logos on fabric
- Commercial applications.
- Airports

Smartblind features.

- Full block-out fabrics.
- 3% Openness fabrics
- Translucent fabrics
- No gap aluminium frame
- Hand operated with handle & cord
- Fully motorised option
- 5 Year warranty, Australia wide
- No visible fixings
- Easy Installation

Screen limits 60mm housing

- Up to 2400mm wide, maximum drop 1900mm.
- From 2400-2800mm wide, maximum drop 1400mm.

Screen limits 80mm housing

- Maximum width of 3400mm.
- Maximum height of 3000mm.

The above are a small example of the uses and features of the smart blind,

And we welcome architects, building designers and home owners to contact us for a tailor made solution for your next project, or existing application.

Effective, year round thermal control

1300SCREEN
7 2 7 3 3 6

Freedom™ Elite Pulldown series

Perfect screen solutions for windows, smaller doorways and servery windows

Freedom™ Elite Pull Down is perfect for servery windows and makes entertaining easy. Simply tilt to release the brake, then slide the screen up to allow food and drinks to pass through then lower it again to keep pesky insects at bay.

The patented Freedom™ Brake System locks the screen closed with a seamless seal without the use of magnets or latches. Flush countertops or bars do not require any additions or rework to spoil their smooth surfaces as the screen uses a brush strip to gently seal the lower edge.

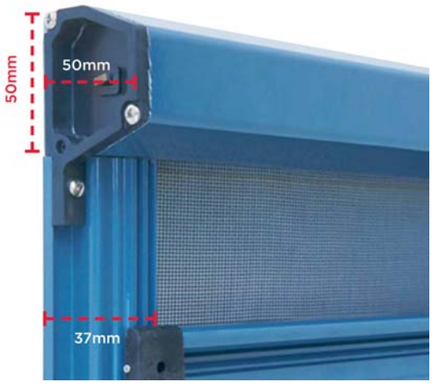

compact and discreet housing

CALL 1300 727 336 to speak to one of our dedicated technical support staff

FREEDOM™ PULLDOWN SERIES

Patented Technology | **Bug & Insect Protection** | **Shade from UV Rays** | **Hand Brake System**

High Wind Resistance | **Increased Air Flow** | **Air-con Thermal Savings** | **Secured Zipper Track**

Freedom™ Motorised Smartscreen series

Enjoy your outdoor living space with a touch of a button.

The Motorised Smartscreen gives you the freedom to entertain and enjoy your outdoor living space with a touch of a button. Ideal for large openings including doors, patios, alfresco areas and garages. The Motorised Smartscreen spans to 5 metres and utilises quality motor and control systems by Somfy® technology. Available in a varierty of insect mesh options or Soltis® blind material.

Innovative Technology

Enjoy your outdoor living area and reduce the effect of sun glare, wind and rain with a touch of a button. Utilising quality motorising and control systems by Somfy® technology.

Engineered To Last

Engineered to last the harsh Australian climate. Backed by a limited five-year warranty with a nationwide distribution network with parts and service backup. Made with quality Australian aluminium and premium UV resistant fibreglass mesh.

Eco-Friendly

Reduce your air-conditioning consumption and the associated electricity costs. Great for the environment as it eliminates the need for insect repellents.

Discreet

The sleek retrofit housing neatly attaches to your existing opening and is available in a range of colours to match. Compact and discreet 100 mm x 105 mm housing*. The screen is discreetly rolled away until you are ready to use it.

Custom

Custom-made to fit all openings* and is available in the popular Dulux® powder coat range. Variety of sun protection and UV resistant mesh options – Pet Lite, Sand fly and new Soltis® blind material.

*Maximum height and width ratio applies.

Colour selection -
Special anodised colours available, please select from the Dulux and Interpon range, Visit the download Centre on our website,

www.freedomscreens.com.au

DISTRIBUTORS

QUEENSLAND	TELEPHONE:	EMAIL:
Gold Coast	0428 194 545	russell@freedomscreens.com.au
Brisbane	0499 725 277	brisbane@freedomscreens.com.au
Toowoomba	1300 727 336	toowoomba@freedomscreens.com.au
Sunshine Coast	07 5474 4441	freedomscreens@optusnet.com.au
Wide Bay	07 5476 3270	freedomscreens2@bigpond.com.au
Cairns	07 4035 5611	freedom.screens@bigpond.com.au
NEW SOUTH WALES		
Sydney	1300 727 336	sydney@freedomscreens.com.au
Newcastle	1300 727 336	sydney@freedomscreens.com.au
Coffs Harbour	0499 100 990	freedomscreensmidnorthcoast@gmail.com
Northern Rivers	1300 727 336	northernrivers@freedomscreens.com.au
South Coast	0407 236 630	southcoast@freedomscreens.com.au
CANBERRA		
Canberra & South West NSW	02 6260 1824	canberra@freedomscreens.com.au
VICTORIA		
Victoria	03 9428 6320	info@freedomscreensvictoria.com.au
TASMANIA		
Tasmania	03 62 788 887	peter@taylorscreens.com.au
SOUTH AUSTRALIA		
South Australia	1300 727 336	info@freedomgroup.net.au
WESTERN AUSTRALIA		
Western Australia	08 9244 7436	freewa@bigpond.net.au
NORTHERN TERRITORY		
Northern Territory	0439 003 600	screens@4frontenergy.com.au

FREEDOM RETRACTABLE SCREENS®

AWA AUSTRALIAN WINDOW ASSOCIATION

PROUDLY AUSTRALIAN MADE AND OWNED

LIMITED 5 YEAR WARRANTY

FREEDOM™ INFINITY ZIPLINE™ NATA 590Kg APPROVED TESTED BY A NATA-APPROVED LABORATORY

HEAD OFFICE
p +61 7 5598 3575 f + 61 7 5534 4317 e screens@freedomscreens.com.au a 9 Traders Way Currumbin,QLD Australia 4223
www.freedomscreens.com.au